For reference only. See data sheet for the detailed specifications.

Technical Specification

EIA WR	WR22
Frequency Range(GHz)	33.0 – 50.0
Attenuation(dB)	3
Attenuation Accuracy(dB)	±1.3 Max.
Attenuation Sensitivity(dB)	±0.9 Max.
VSWR	1.15:1 Max.
Average Power(W CW)	1
Peak Power(KW)	0.5
Flange	FUGP400(UG-383/U)
Material	Cu
Size(mm)	139.7 x 28.6 x 31.7
Net Weight(Kg)	0.62 Around

Outline Drawing (Size: mm)

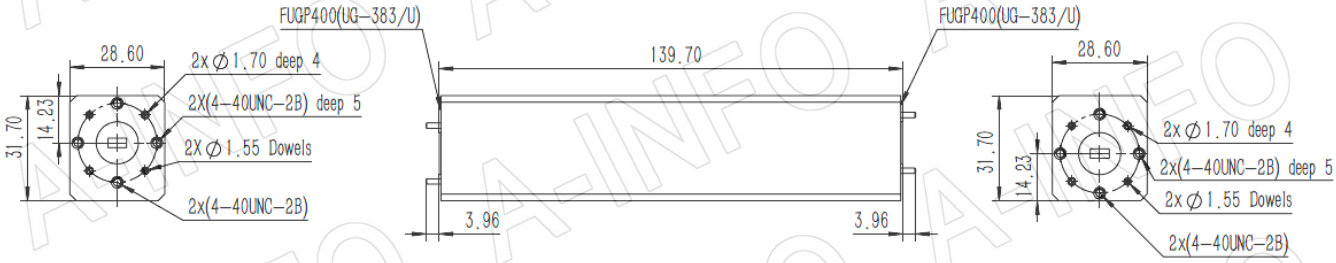

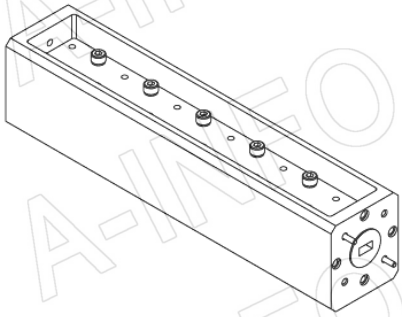

AINFO Inc.
China(Beijing): Tel: (+86) 10-6266-7326, (+86) 10-6266-7327 Fax: (+86) 10-6266-7379
China(Chengdu): Tel: (+86) 28-8519-2786, (+86) 28-8519-3044 Fax: (+86) 28-8519-3068
USA : Tel: (+1) 949-639-9688, (+1) 949-639-9608 Fax: (+1) 949-639-9670
Website: www.ainfoinc.com
Email: sales@ainfoinc.com

Data subject to change without notice. For current data sheets, please contact: Sales@ainfoinc.com

Flange Drawing (Size: mm)

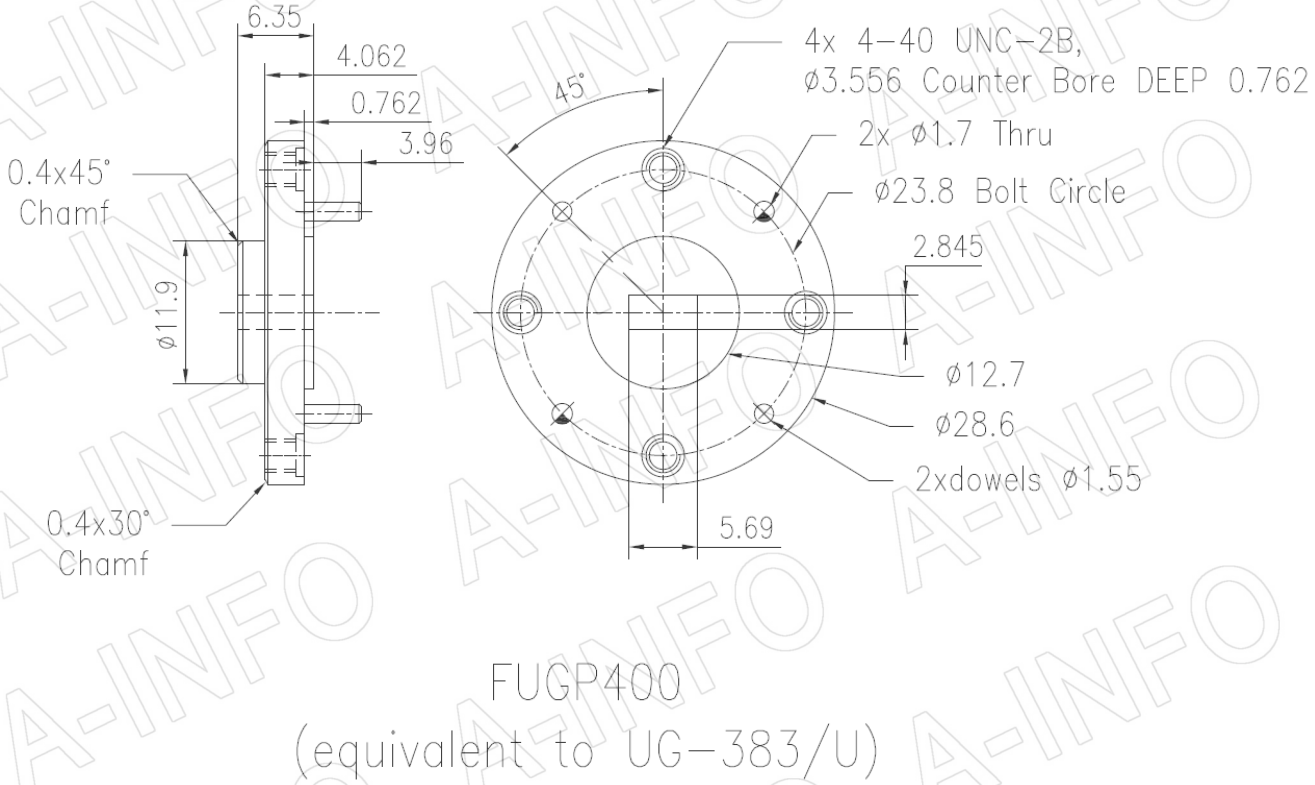

AINFO Inc.
China(Beijing): Tel: (+86) 10-6266-7326, (+86) 10-6266-7327 Fax: (+86) 10-6266-7379
China(Chengdu): Tel: (+86) 28-8519-2786, (+86) 28-8519-3044 Fax: (+86) 28-8519-3068
USA : Tel: (+1) 949-639-9688, (+1) 949-639-9608 Fax: (+1) 949-639-9670
Website: www.ainfoinc.com
Email: sales@ainfoinc.com

Data subject to change without notice. For current data sheets, please contact: Sales@ainfoinc.com

Test Results

Attenuation & VSWR

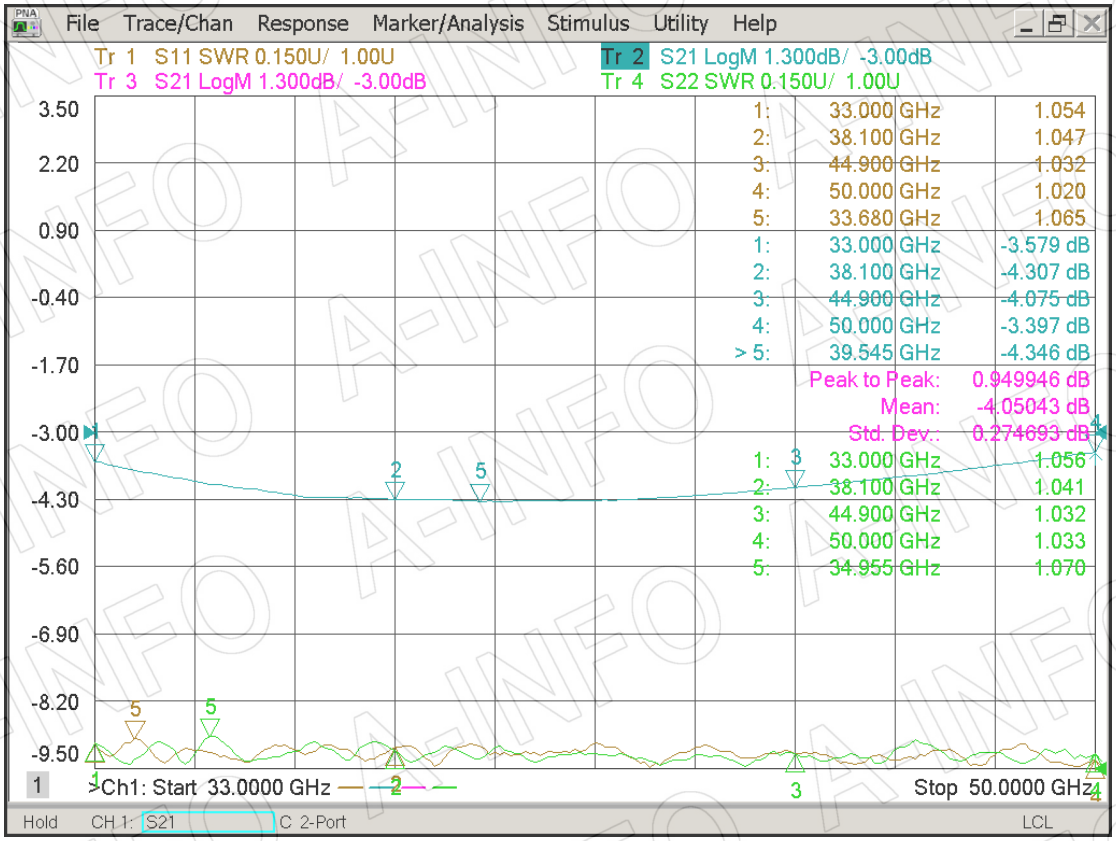

AINFO Inc.
China(Beijing): Tel: (+86) 10-6266-7326, (+86) 10-6266-7327 Fax: (+86) 10-6266-7379
China(Chengdu): Tel: (+86) 28-8519-2786, (+86) 28-8519-3044 Fax: (+86) 28-8519-3068
USA : Tel: (+1) 949-639-9688, (+1) 949-639-9608 Fax: (+1) 949-639-9670
Website: www.ainfoinc.com
Email: sales@ainfoinc.com

Data subject to change without notice. For current data sheets, please contact: Sales@ainfoinc.com